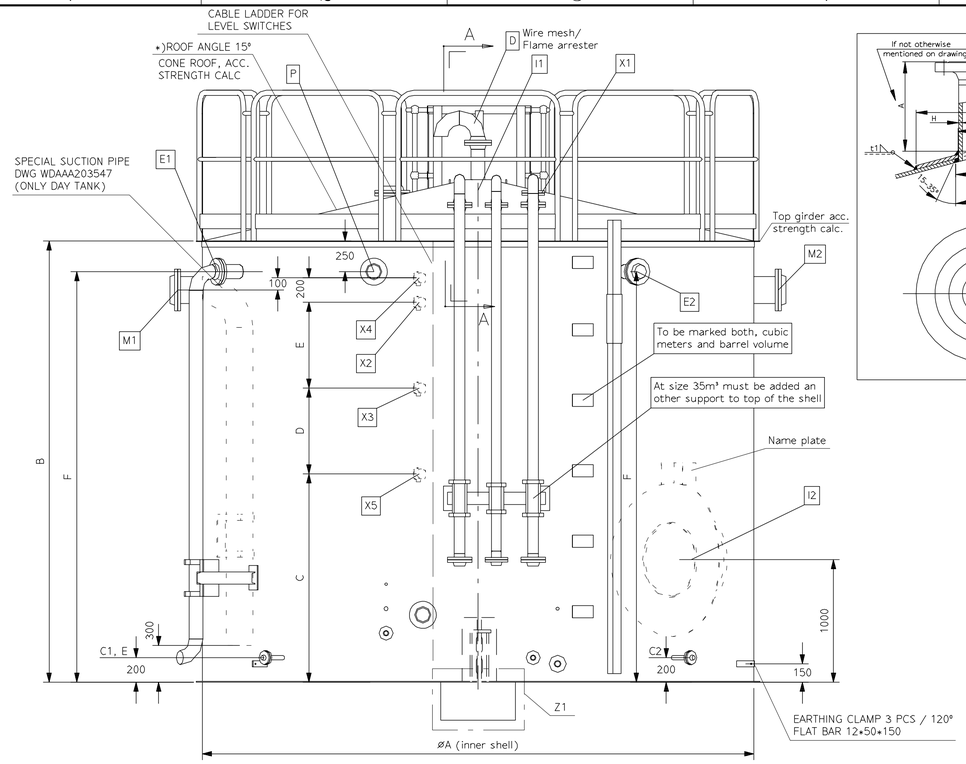

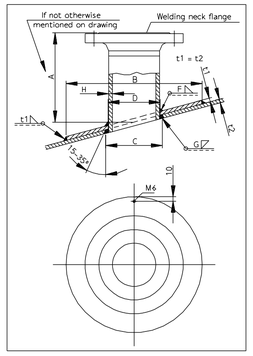

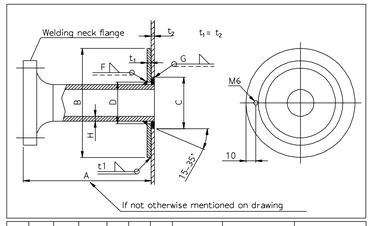

DN -	du mm	H mm	min A mm	B mm	C mm	D mm	F if t2<12 mm	G mm	t1 mm
50	60,3	5,54	200	-	73	63	6	Full penetration	Same as t2
65	76,1	7,01	200	235	89	79	6	Full penetration	Same as t2
80	88,9	7,62	200	265	102	92	6	Full penetration	Same as t2
100	114,3	8,56	200	305	127	117	6	Full penetration	Same as t2
125	139,7	9,53	200	350	153	143	6	Full penetration	Same as t2
150	168,3	10,97	200	400	181	171	6	Full penetration	Same as t2
200	219,1	12,7	200	485	232	222	6	Full penetration	Same as t2
250	273	12,7	225	585	286	276	6	Full penetration	Same as t2
600	609,6	12,7	300	1255	622	613	6	Full penetration	Same as t2

FOR OTHER DIMENSIONS SEE WDAAA321603

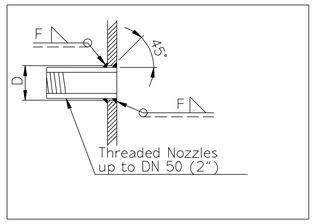

	CONNECTIONS	DIN	API
A	HFO FILLING	DN80/DIN2633	3"/ANSI B16.5 150lb
B	SUCTION TO UNIT	DN100/DIN2633	4"/ANSI B16.5 150lb
C1	DRAIN / EMPTYING	DN25/DIN2633	1"/ANSI B16.5 150lb
C2	DRAIN / EMPTYING +(BLIND FLANGE)	DN25/DIN2633	1"/ANSI B16.5 150lb
D	VENTING PIPE / OPTIONAL FLAME ARRESTER	DN100/DIN2633	4"/ANSI B16.5 150lb
E1	OVERFLOW	DN100/DIN2633	4"/ANSI B16.5 150lb
E2	OVERFLOW / SPARE, BLINDED	DN100/DIN2633	4"/ANSI B16.5 150lb
F	FROM UNIT	DN80/DIN2633	3"/ANSI B16.5 150lb
H	RETURN FROM UNIT	DN65/DIN2633	2,5"/ANSI B16.5 150lb
I1	MANHOLE	WDAAA361843	WDAAA361843
I2	MANHOLE	WDAAA361843	WDAAA361843
K	STEAM INLET	DN25/DIN2633	1"/ANSI B16.5 150lb
L	CONDENSATE OUTLET	DN25/DIN2633	1"/ANSI B16.5 150b
M1 **)	OVERFLOW FROM DAY/BUFFER TANK	DN200/DIN2633	8"/ANSI B16.5 150lb
M2 **)	OVERFLOW FROM DAY/BUFFER TANK	DN200/DIN2633	8"/ANSI B16.5 150lb
Aa2	TEMPERATURE (OPTIONAL / PLUGGED)	R3/4"-DIN2986	R3/4"-DIN2986
P	FOAM POURER (OPTIONAL / BLIND FLANGE)	DN100/DIN2633	4"/ANSI B16.5 150lb
X2	HIGH LEVEL CONTROL	4V67B0026	4V67B0026
X3	LOW LEVEL CONTROL	4V67B0026	4V67B0026
X4	HIGH HIGH LEVEL CONTROL	4V67B0026	4V67B0026
X5	LOW LOW LEVEL CONTROL	4V67B0026	4V67B0026
Y	STEAM CONTROL THERMOSTAT	R1"	R1"
Ac	CONNECTION FOR PRESSURE TRANSMITTER	4V67B0020	4V67B0020
X1	CONNECTION FOR LOCAL LEVEL INDICATOR	WDAAA203861	WDAAA203861
Aa1	TEMPERATURE LOCAL	R1/2"-DIN2986	R1/2"-DIN2986
Ae	EMERGENCY VALVE (OPTIONAL/BLIND FLANGE)	DN150/DIN2633	6"/ANSI B16.5 150lb

MEASURES

Item	Stand.	Nominal Size***	AØ (mm)	B (mm)	C (mm)	D (mm)	E (mm)	F (mm)	Noninsulated Weight(Dry)	Insulated Weight(Dry)	Stairs DWG.	Strength calc. with anch.	Strength calc. without anch.
1	DIN/API	35m³/220bbl	3000	5400	2650	1050	1100	5150	5200kg	6400kg	WDAAA205312	WDAAA199458	WDAAA268548
2	DIN/API	55m³/345bbl	4500	3600	1700	700	700	3450	6250kg	7500kg	WDAAA205312	WDAAA199452	WDAAA268547

*** From bottom to overflow nozzle E1.

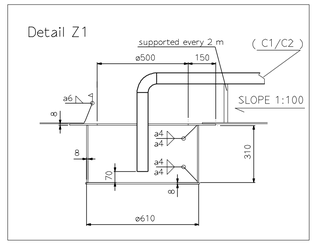

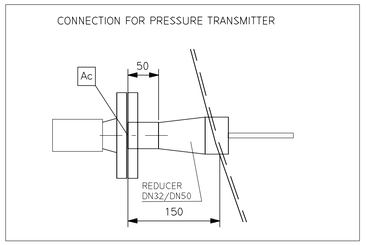

*)Tank Plates/mm	35m³ mm	55m³ mm
Roof Plate	6	6
Course 3	6	-
Course 1 - 2	6	6
Bottom Plate	8	8

Course height: 1800mm/72Inches

DESIGN	BASED ON API 650
DESIGN REQUIREMENTS	WDAAA205275
*)MATERIAL	E-275 C, Pipes St 37
SURFACE TREATMENT	WDAAA203188
INSULATION (IF INSULATED)	WDAAA199650 WDAAA199236
QUALITY INSTRUCTION	WDAAA368418
COUNTER FLANGES INCLUDED (WELDNECK)	
*)PRELIMINARY STRENGTH CALC.	SEE TABLE
*)SPECIFIED STRENGTH CALC. BY TANK MANUFACTURER	

*)PRELIMINARY STRENGTH CALCULATIONS ARE BASED ON MATERIAL E-275-C, THE ROOF CONSTRUCTION SHOWN IN THE DRAWING AND ON THICKNESSES AND COURSES (1800mm/72Inches) OF THE PLATES IN THE ENCLOSURED 'TANK PLATES' TABLE.

FINAL STRENGTH CALCULATIONS TO BE BASED ON THE DETAIL DRAWINGS.

Main flow diagram, Buffer tank, Basic level WDAAA353290
Main flow diagram, Buffer tank, Extended level WDAAA353292

Main flow diagram, Day tank, Basic level WDAAA353320
Main flow diagram, Day tank, Extended level WDAAA353322

Device list, Buffer tank, Basic level WDAAA353291
Device list, Buffer tank, Extended level WDAAA353293

Device list, Day tank, Basic level WDAAA353321
Device list, Day tank, Extended level WDAAA353323

**) ONLY ONE NOZZLE NEEDED
(TO BE PLACED ON BUFFER/DAYTANK SIDE)

IF USED AS DAYTANK ORDER SPECIAL SUCTION PIPE WDAAA203547

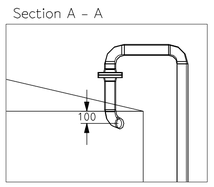

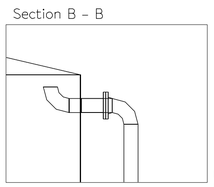

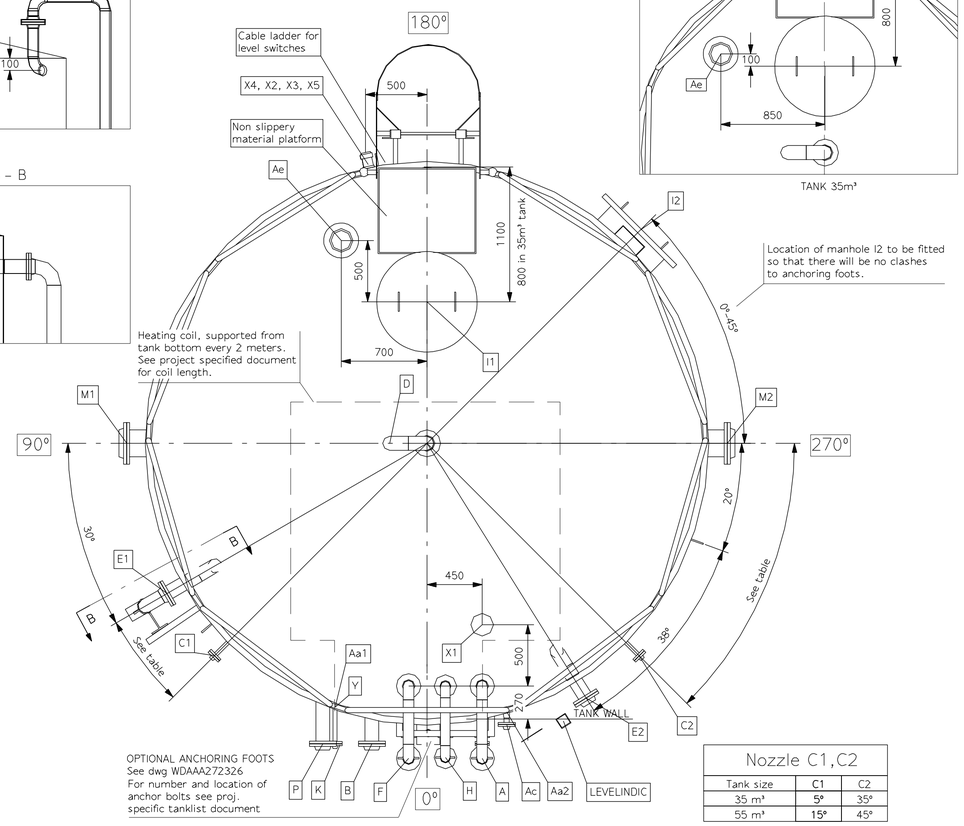

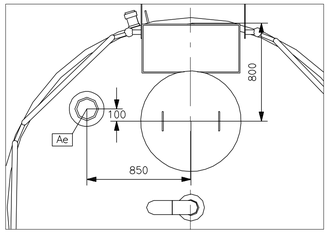

Nozzle C1,C2		
Tank size	C1	C2
35 m³	5°	35°
55 m³	15°	45°

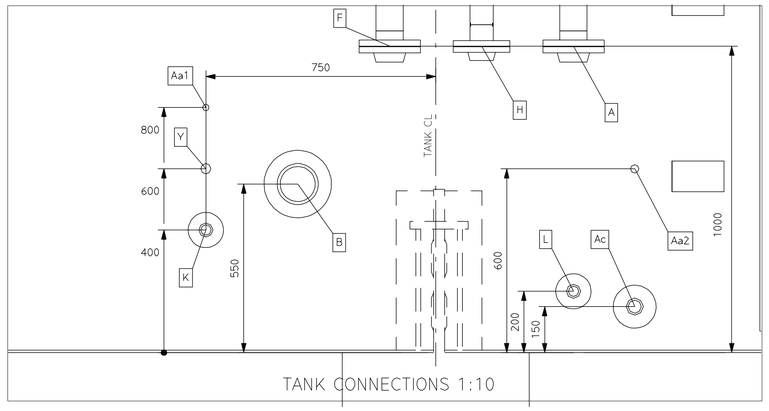

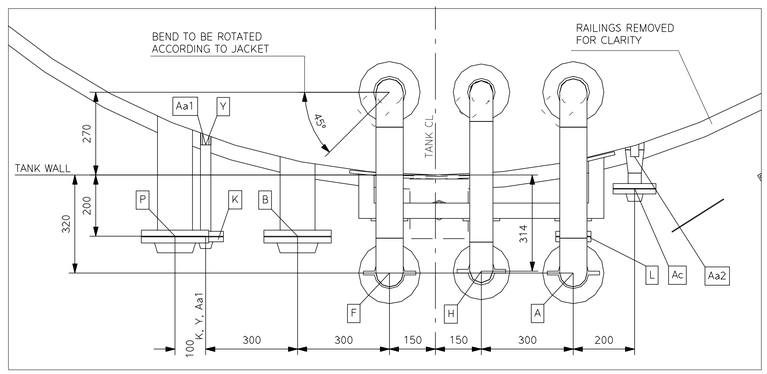

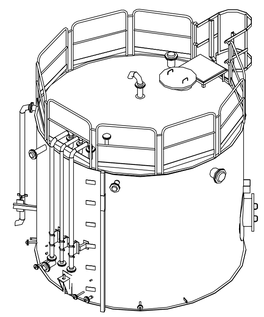

REV.	DATE	MADE	APPVD.	MEMO NO.	EXPLANATION
b	23 Dec 2004	THA	VAKA		Generally updated
a	8 May 2003	ajar	MIJI		Generally updated

WÄRTSILÄ

© Wartsila Finland Oy
Power Plants

Product - | PDMS | UNITS mm/kg

MADE	29 Jan 2001	HHa/Hakko	ASLY.DRC -
CHKD	06.Nov.01	VAKA/Koskela	SCALE 1:25 (1:10) / SIZE A1
APPD	06.Nov.01	MIJI/Juopperi	

DIMENSIONAL DRAWING
STANDARD HFO BUFFER/DAY TANK
35-55m³ STANDARD DIN/API

Proj. no. -

WFI-P STD

Page No. | DRC. No. WDAAA169648 - WDP - /HFO_BUFFER-DAY_TANKS | b Rev.

This drawing is the property of Wartsila and shall neither be copied, shown nor communicated to a third party without the consent of the owner.